Application Design Guide

CFR Boiler Models CFR 1500 and CFR 3000

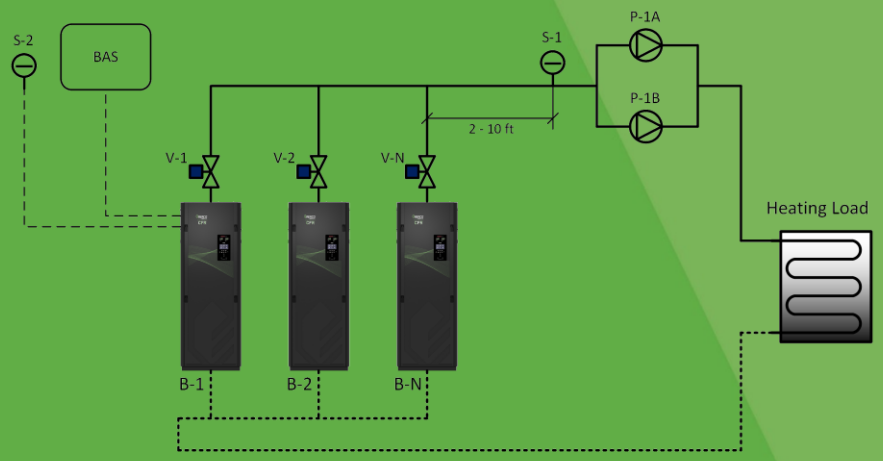

Other documents for this product include:

- OMM-0163 CFR Boiler Installation Manual
- OMM-0164 CFR Boiler Operations Manual
- OMM-0167 CFR Boiler Reference Manual
- TAG-0105 CFR Boiler Vent & Combustion Air Guide
- TAG-0106 CFR Boiler Gas Guide
- TAG-0108 CFR Boiler Electrical Guide

Disclaimer

The information contained in this Design Guide is subject to change without notice from AERCO International, Inc. AERCO makes no warranty of any kind with respect to this material, including, but not limited to, implied warranties of merchantability and fitness for a particular application. Some states do not allow the exclusion or limitation of incidental or consequential damages, so the above limitation may not apply. AERCO is not liable for errors appearing in this Design Guide, not for incidental or consequential damages occurring in connection with the furnishing, performance, or use of these materials.

AERCO International, Inc. • 100 Oritani Drive • Blauvelt, NY 10913
USA: T: (845) 580-8000 • Toll Free: (800) 526-0288 • AERCO.com
Technical Support • (800) 526-0288 • Mon-Fri, 8 am - 5 pm EST

© 2025 AERCO

CONTENTS

1. GENERAL 3
2. SINGLE AND MULTIPLE APPLICATIONS 3
3. PIPING 3
3.1 Pressure and Temperature Ratings 3
3.2 Flow Rate Specifications 3
3.3 Pipe Design Provisions 4
4. TYPICAL APPLICATIONS 4
4.1 Space Heating 5
4.2 Space Heating (Primary-Secondary Piping) 8
4.3 Combination System with SmartPlate EV and 2-Port Buffer Tank 10
4.4 Combination System with SmartPlate EV and 4-port Buffer Tank 13
4.5 Combination System with Indirect Storage Tank Water Heater 16
4.6 Campus Application 18
5. INPUT/OUTPUT REFERENCE DIAGRAM 21

⚠ WARNING!

Read this guide and the applicable Installation Manual for the CFR boiler you selected BEFORE proceeding with installation. Failure to read and follow attached instructions or operating parameters may lead to the product's failure and possible damage to property or personal injury. Refer to the warranty for operating parameters to ensure proper use with your water supply.

Keep this Design Guide for future reference.

IMPORTANT!

BEFORE proceeding with installation, read this Design Guide and the applicable Installation Manual for the CFR boiler you selected. Failure to read and follow attached instructions or operating parameters may lead to the product's failure and possible damage to property or personal injury. Refer to the warranty for operating parameters to ensure proper use with your water supply.

Keep this Design Guide for future reference.

1. GENERAL

AERCO CFR boilers optimize hydronic systems for peak performance and efficiency. They operate with up to 4:1 turndown to match the changing requirements of the energy input, minimize cycling and maximize seasonal efficiency. Their compact footprint allows flexibility and reduces total project installation costs.

This guide is intended to help designers integrate CFR boilers with the most common types of systems. If a special application is needed, please call your AERCO Representative or the AERCO factory for assistance.

2. SINGLE AND MULTIPLE APPLICATIONS

CFR boilers can be applied either as stand-alone single units or in multiple batteries of boilers. **Actual boiler sizing and selection are the sole responsibility of the designer.** ASHRAE standards recommend sizing equipment with a minimum of over sizing for maximum system efficiency.

3. PIPING

3.1 Pressure and Temperature Ratings

The maximum working pressure (MAWP) for CFR boilers is 160 psig (1103 kPa).

Individual ASME pressure relief valves are supplied on each boiler in setpoints of 30, 50, 60, 75, 100, 125, 150, or 160 psig (207, 414, 517, 689, 862, 1034, or 1103 kPa), as specified.

CFR boilers are applicable to systems with supply temperatures of 140°F to 190°F. The minimum return temperature is 120°F for 50% heat input or higher (2:1 turndown capability). For higher turndown capabilities, the system can be designed with higher return temperatures as shown in Table 3-1.

	TABLE 3-1: Return Temperatures		
Min. Return Temp.	**Lowest Heat Input CFR1500**	**Lowest Heat Input CFR2000**	**Lowest Heat Input CFR3000**
150°F	40%	25%	25% (4:1 turn down)
140°F	43%	30%	33%
120°F	63%	45%	50%

3.2 Flow Rate Specifications

CFR boilers require the following minimum flow rate for proper and stable temperature control. To prevent erosion of construction materials, maximum flow per boiler is limited as shown.

TABLE 3-2: Minimum and Maximum Flow Rates		
Model	**Min. Flow Rate**	**Max. Flow Rate**
CFR1500	30 gpm	175 gpm
CFR2000	40 gpm	225 gpm
CFR3000	55 gpm	300 gpm

3.3 Pipe Design Provisions

Minimum flow must be observed. Ancillary flow devices including pumps and valves must be selected and operated to provide minimum flow. Controls (internal boiler controls and/or building automation system) must be configured to operate pumps and valves to allow flow through CFR boilers in operation.

For multiple boiler installations, piping must ensure balanced flow by using reverse-return piping or a balancing valve at the outlet of each boiler. Failure to balance flow evenly will prevent full delivery of boiler capability at design conditions and may cause over-cycling and unnecessary stress on the boilers.

The CFR boiler is approved for zero-side clearance in two-unit pairs if space is at a premium. Piping should allow free access between boilers. For maintenance purposes, each CFR boiler shall have individual valves on supply and return from the system. When used with a refrigeration (chiller) system, the boilers must be installed to prevent coolant from entering the boiler.

4. TYPICAL APPLICATIONS

CFR boilers can be used in any closed-loop heating system within their design limitations. The following typical piping and wiring schematic diagrams represent the most common types of installation detail. These diagrams are not intended for any particular system but are rather composites of how AERCO boilers interface with heating and domestic hot water applications in the real world. The designer should incorporate CFR boilers in each system so as to achieve maximum operating efficiency.

With ultimate control over the energy transfer process under a broad range of temperatures, the designer should first consider how the system best needs the supplied energy. The boilers should then be applied in the manner that best enables them to use their finite control and capability to supplement the system, using minimum applied energy.

The following examples illustrate typical piping and wiring diagrams with brief description of the application and its features:

IMPORTANT!

For all applications, the header sensor (S-1) must be located 2-10 ft from the nearest boiler.

Diagram 4.1: Space Heating

Diagram 4.2: Space Heating (Primary-Secondary Piping)

Diagram 4.3: Combination System with SmartPlate EV, 2-Port Buffer Tank and Domestic Summer Pump Mode

Diagram 4.4: Combination System with SmartPlate EV and 4-port Buffer Tank

Diagram 4.5: Combination System with Indirect Storage Tank Water Heater

Diagram 4.6: Campus Application

See Section 5 for complete Input/Output Reference diagram.

Concept Drawings: The following illustrations are only concept drawings, not engineered drawings. They are not intended to describe a complete system, nor any particular system. It is up to the system designer to determine the necessary components for and configuration of the particular system being designed, including ancillary mechanical and control components, and any safety devices which in the judgement of the designer are appropriate, in order to properly size, configure and design that system and to ensure compliance with building and safety code requirements.

4.1 Space Heating

CFR boilers are operated via Boiler Sequencing Technology (BST) to provide space heating. Supply temperature is maintained via constant setpoint, outdoor air reset or remote setpoint command (from building automation system or remote analog signal). Application utilizes AERCO supplied header sensor, sequencing valves and outdoor air sensor.

- The AERCO Edge® controller sequences the boiler plant for maximum system efficiency by running as many boilers as available, each operating at its most efficient firing rate.
- Sequencing valves isolate standby boilers, reducing minimum flow requirement.
- Edge controller supports integration with BAS via BACnet IP, Modbus RTU and Modbus TCP.

Essential System Settings:

Edge Controller Parameter	Setting
Application	SH (Space Heating)
SH Operating Mode	Constant Setpoint, Outdoor Air Reset or Remote Setpoint
CASCADE CONFIGURATION-Hdr Temp Sensor	Direct
CASCADE CONFIGURATION-Outdoor Air Temp Sensor *(If SH Operating Mode=Outdoor Air Reset)*	Direct
VALVE CONFIGURATION-Select Output	Cascade Valve
VALVE CONFIGURATION-Valve Feedback	Enabled

Pipe Temp.	Line Type
HWR	- - - - - - - - -
HWS	————

Legend:
S-1=Header Sensor
S-2=Outdoor Air Sensor
P-1A, P-1B=System Pump(s)
V-1,2,N=Sequencing Valve

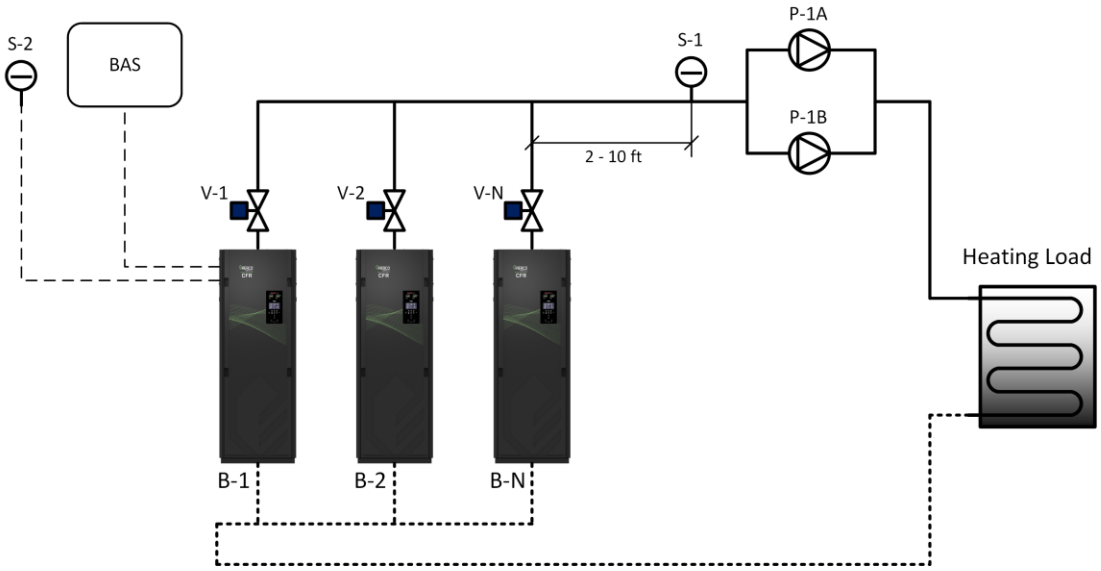

Diagram 4-1a: Space Heating Piping

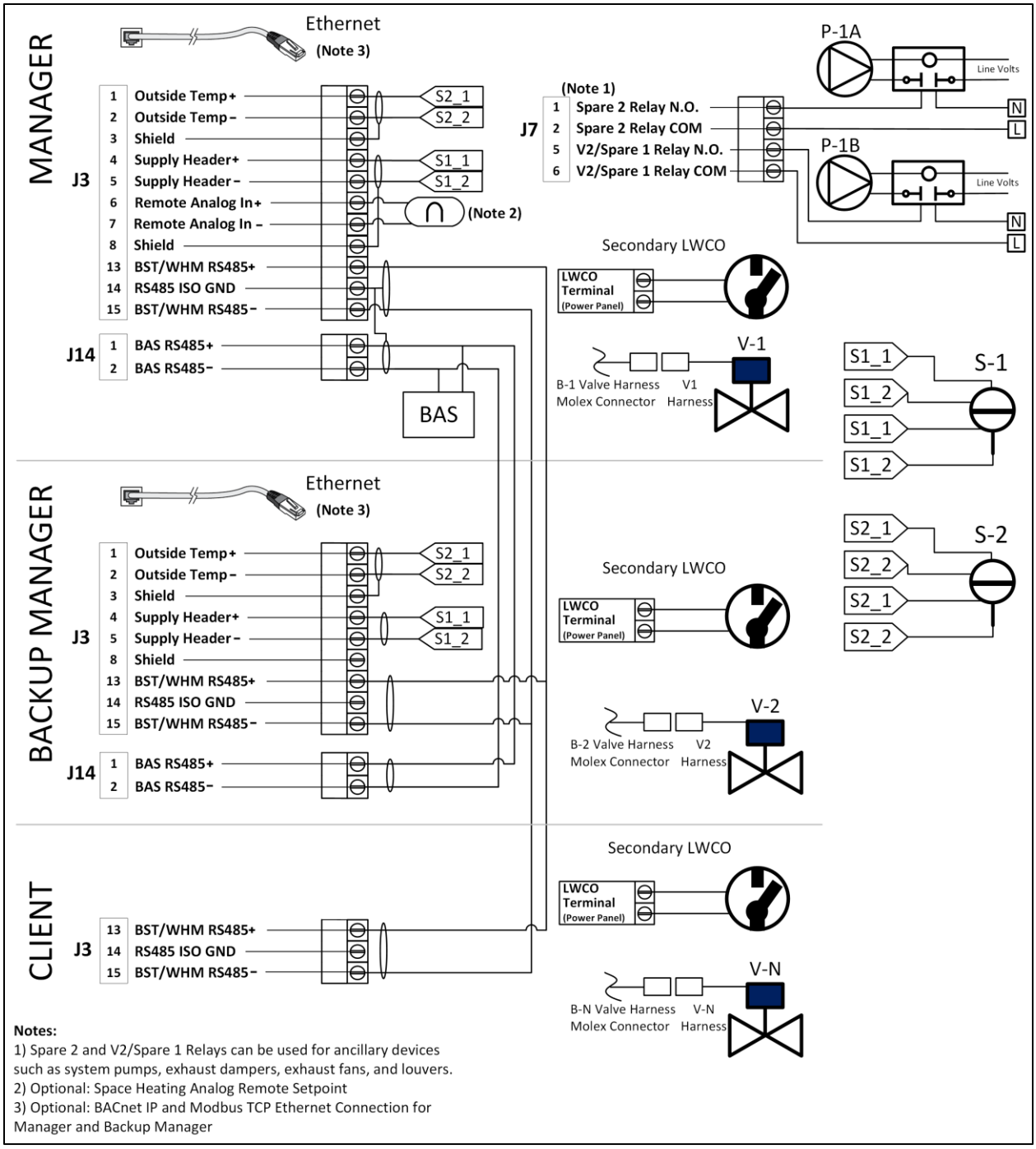

Diagram 4-1b: Space Heating Wiring

4.2 Space Heating (Primary-Secondary Piping)

Boiler plant is piped in primary-secondary method with individual boiler pumps. CFR boilers are operated via Boiler Sequencing Technology (BST) to provide space heating. Supply temperature is maintained via constant setpoint, outdoor air reset or remote setpoint command (from building automation system or remote analog signal). Application utilizes AERCO supplied header sensor and outdoor air sensor.

- The AERCO Edge® controller sequences the boiler plant for maximum system efficiency by running as many boilers as available, each operating at its most efficient firing rate.
- Use of variable speed boiler pumps prevents hot water recirculation at the low loss header, resulting to increased efficiency.
- Edge controller supports integration with BAS via BACnet IP, Modbus RTU and Modbus TCP.

Essential System Settings:

Edge Controller Parameter	Setting
Application	SH (Space Heating)
SH Operating Mode	Constant Setpoint, Outdoor Air Reset or Remote Setpoint
CASCADE CONFIGURATION-Hdr Temp Sensor	Direct
CASCADE CONFIGURATION-Outdoor Air Temp Sensor *(If SH Operating Mode=Outdoor Air Reset)*	Direct

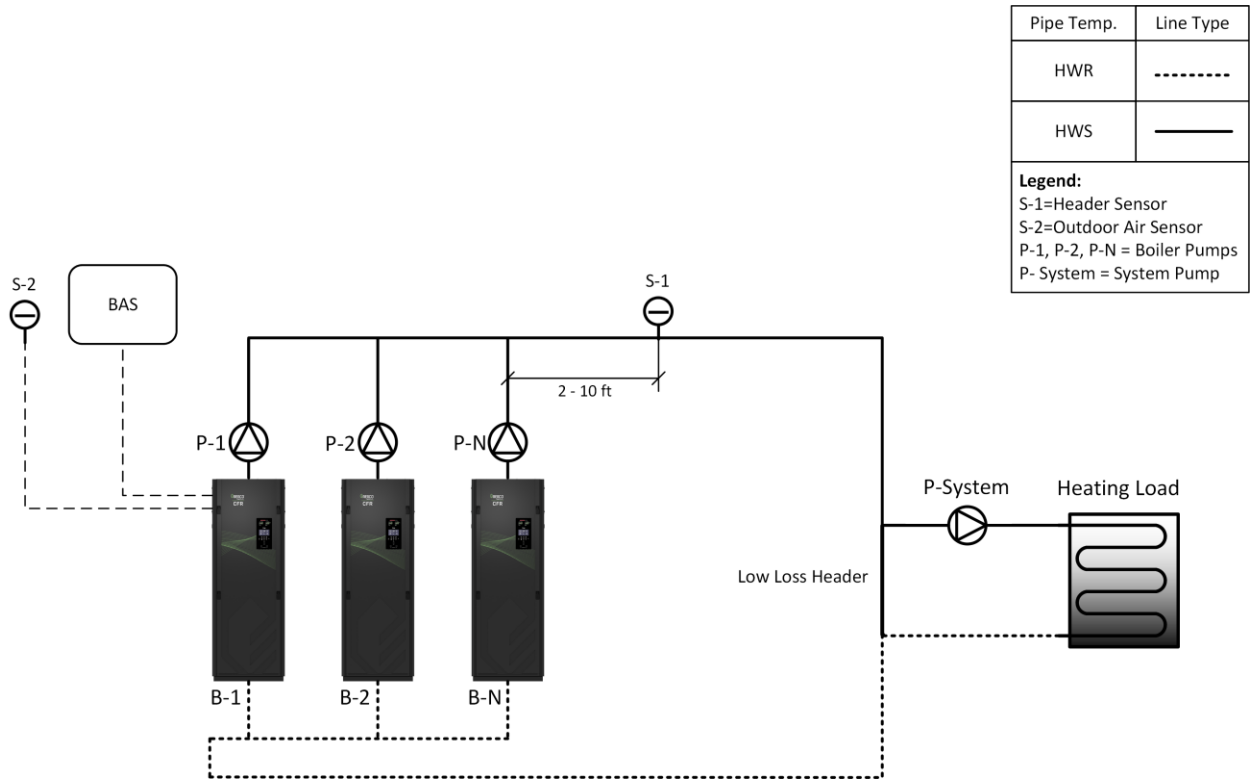

Diagram 4-2a: Space Heating (Primary-Secondary) Piping

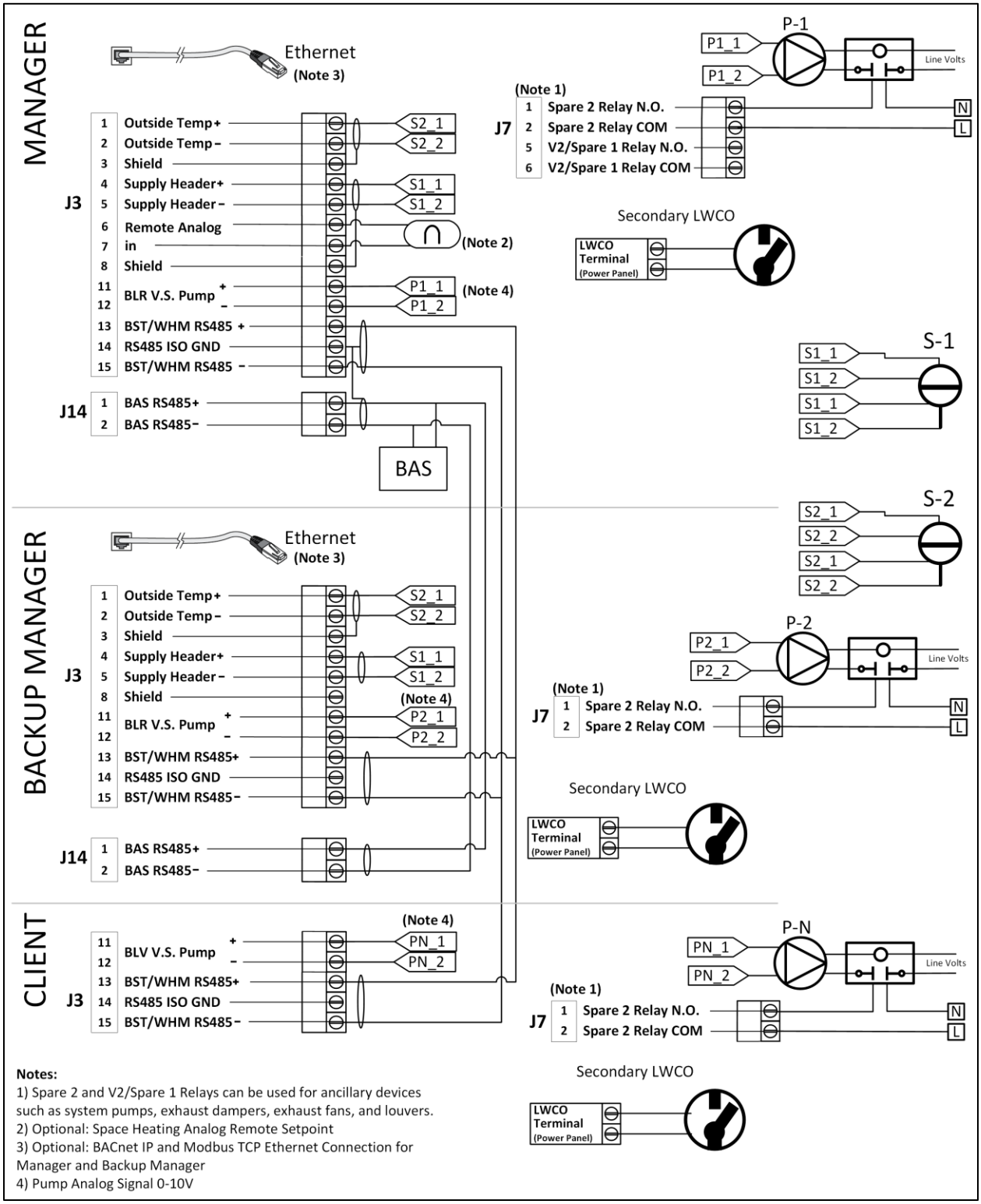

Diagram 4-2b: Space Heating (Primary-Secondary) Wiring

4.3 Combination System w/ SmartPlate EV, 2-Port Buffer Tank and Domestic Summer Pump Mode

CFR boilers are operated via Boiler Sequencing Technology (BST) to provide space heating and domestic hot water generation through AERCO SmartPlate EV water heaters. Space heating supply temperature is maintained as constant setpoint, via outdoor air reset or from remote setpoint command (from building automation system or via remote analog signal). Domestic hot water generation setpoint is a priority: temperature setpoint is boosted when header temperature falls below DHW setpoint. DHW boiler/summer pump runs continuously to provide boiler water to the water heaters.

The SmartPlate EV monitors the domestic outlet temperature and the flow rate of the incoming domestic water to control the valve located on the inlet. During load conditions, the control valve will adjust to maintain a ±4°F setpoint at up to 50% load changes based on the domestic outlet temperature and flow rate or temperature rate of change and actuate the hydronic side control valve to maintain setpoint. At full demand, the control valve will be completely open providing maximum heat transfer. During no load conditions the SmartPlate control valve will remain closed to prevent heat transfer to the domestic side.

2-port buffer tank is utilized to dampen out fast domestic load transitions and minimize boiler cycling. Application utilizes AERCO supplied header sensor, sequencing valves and outdoor air sensor.

- The AERCO Edge® Controller sequences the boiler plant for maximum system efficiency by running as many boilers as available, each operating at its most efficient firing rate.
- Sequencing valves isolate standby boilers from system, reducing minimum flow requirement.
- Edge controller has built-in support for BAS via BACnet IP, Modbus RTU and Modbus.

Essential System Settings:

Edge Controller Parameter	Setting
Application	SH+DHW-Stpt Prty (Space Heating with DHW as priority, i.e., Temperature Boost application)
SH Operating Mode	Constant Setpoint, Outdoor Air Reset or Remote Setpoint
DHW Operating Mode	Constant Setpoint
DHW Pump Control Type	Constant On
CASCADE CONFIGURATION-Hdr Temp Sensor	Direct
CASCADE CONFIGURATION-Outdoor Air Temp Sensor *(If SH Operating Mode=Outdoor Air Reset)*	Direct
VALVE CONFIGURATION-Select Output	Cascade Valve
VALVE CONFIGURATION-Valve Feedback	Enabled

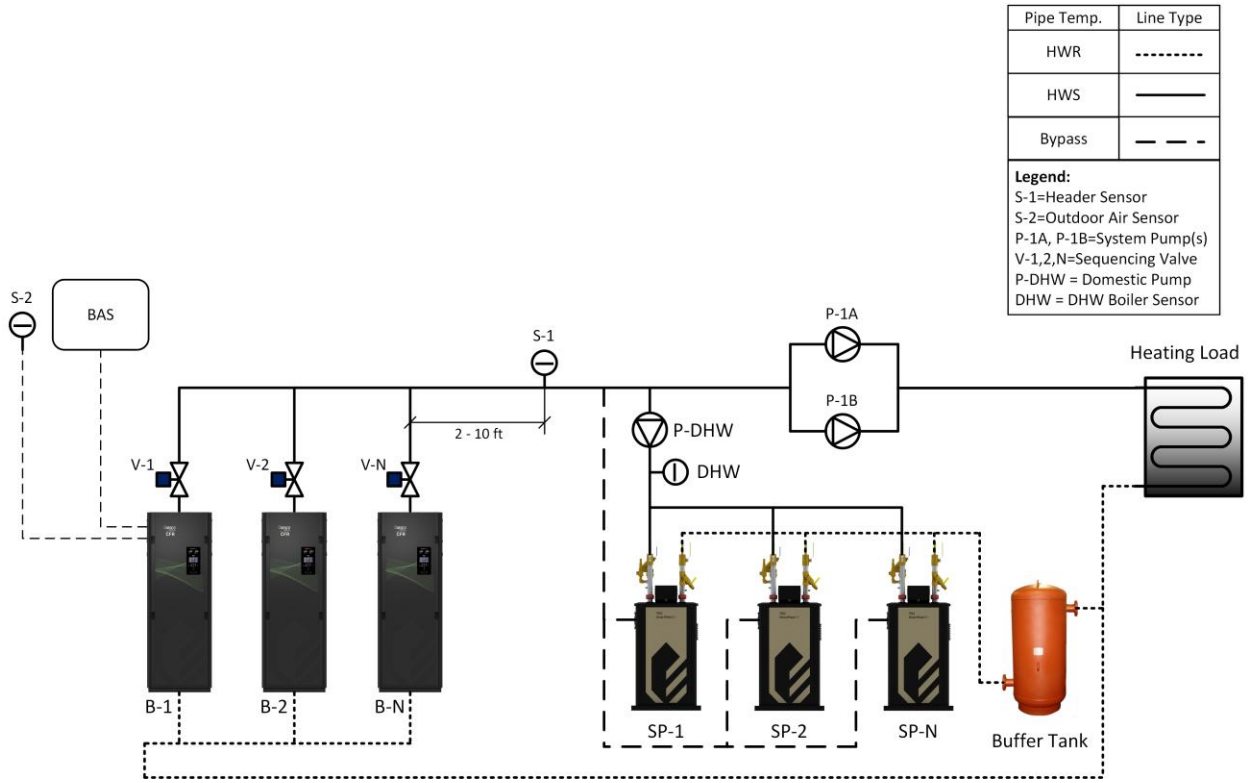

Diagram 4-3a: Combination System with SmartPlate EV, 2-Port Buffer Tank and Domestic Summer Pump Mode Piping

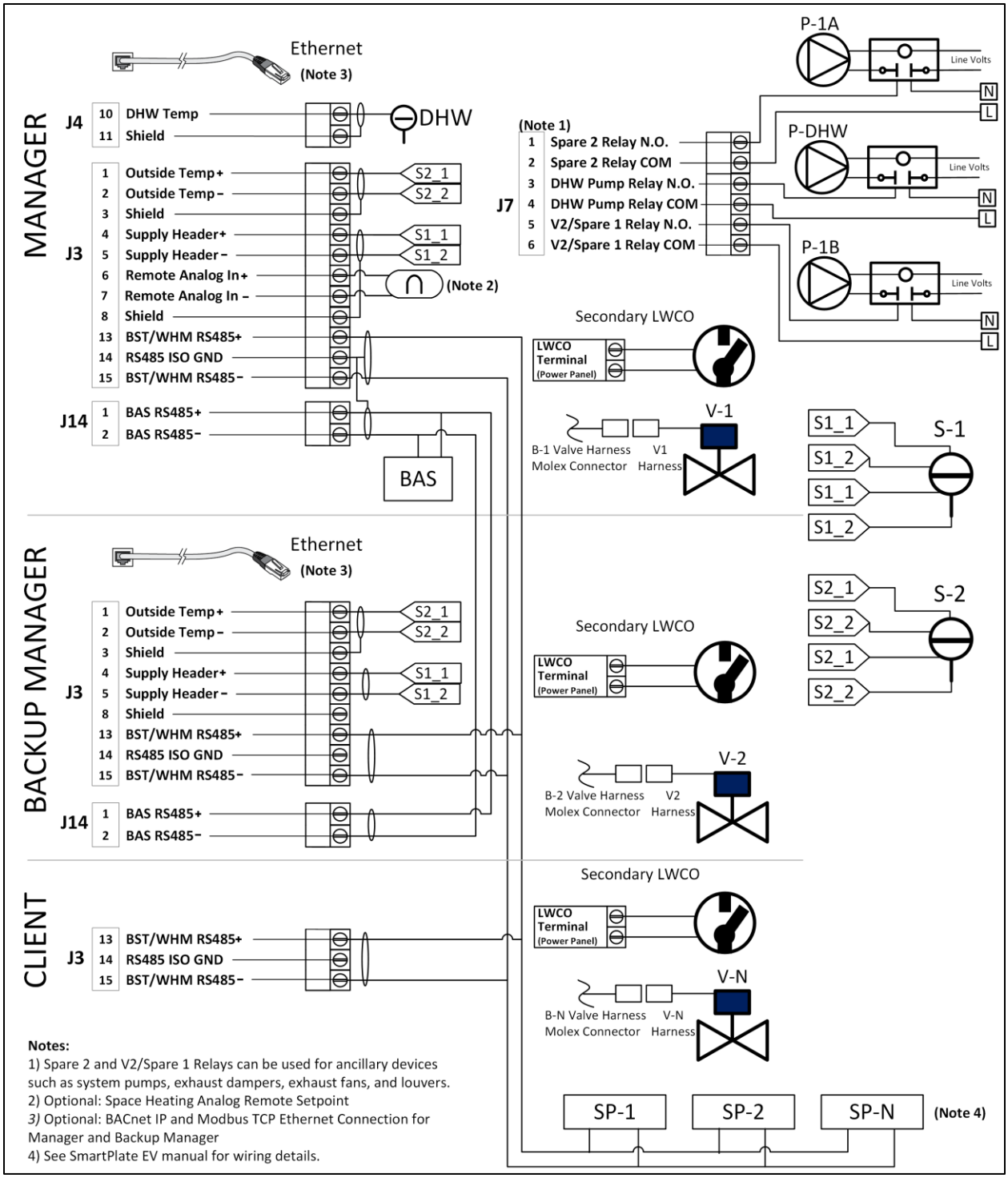

Diagram 4-3b: Combination System with SmartPlate EV, 2-Port Buffer Tank and Domestic Summer Pump Mode Wiring

4.4 Combination System with SmartPlate EV and 4-port Buffer Tank

CFR boilers are operated via Boiler Sequencing Technology (BST) to provide space heating and domestic hot water generation through AERCO SmartPlate EV water heaters.

Space heating supply temperature is maintained as constant setpoint, via outdoor air reset or from remote setpoint command (from building automation system or via remote analog signal). Domestic hot water generation setpoint is a priority: temperature setpoint is boosted when header temperature falls below DHW setpoint. DHW pump is controlled by the DHW temperature sensor to provide boiler water to the water heaters.

The SmartPlate EV monitors the domestic outlet temperature and the flow rate of the incoming domestic water to control the valve located on the inlet. During load conditions, the control valve will adjust to maintain a ±4°F setpoint at up to 50% load changes based on the domestic outlet temperature and flow rate or temperature rate of change and actuate the hydronic side control valve to maintain setpoint. At full demand, the control valve will be completely open providing maximum heat transfer. During no load conditions the SmartPlate control valve will remain closed to prevent heat transfer to the domestic side.

4-port buffer tank is utilized to dampen out fast domestic load transitions and minimize boiler cycling. Application utilizes AERCO supplied header sensor, sequencing valves and outdoor air sensor.

- The AERCO Edge® Controller sequences the boiler plant for maximum system efficiency by running as many boilers as available, each operating at its most efficient firing rate.
- Sequencing valves isolate standby boilers from the system, reducing minimum flow requirement.
- Edge controller supports integration with BAS via, BACnet IP, Modbus RTU and Modbus TCP.

Essential System Settings:

Edge Controller Parameter	Setting
Application	SH+DHW-Stpt Prty (Space Heating with DHW as priority, i.e., Temperature Boost application)
SH Operating Mode	Constant Setpoint, Outdoor Air Reset or Remote Setpoint
DHW Operating Mode	Constant Setpoint
DHW Pump Control Type	Controlled
CASCADE CONFIGURATION-Hdr Temp Sensor	Direct
CASCADE CONFIGURATION-Outdoor Air Temp Sensor *(If SH Operating Mode=Outdoor Air Reset)*	Direct
VALVE CONFIGURATION-Select Output	Cascade Valve
VALVE CONFIGURATION-Valve Feedback	Enabled

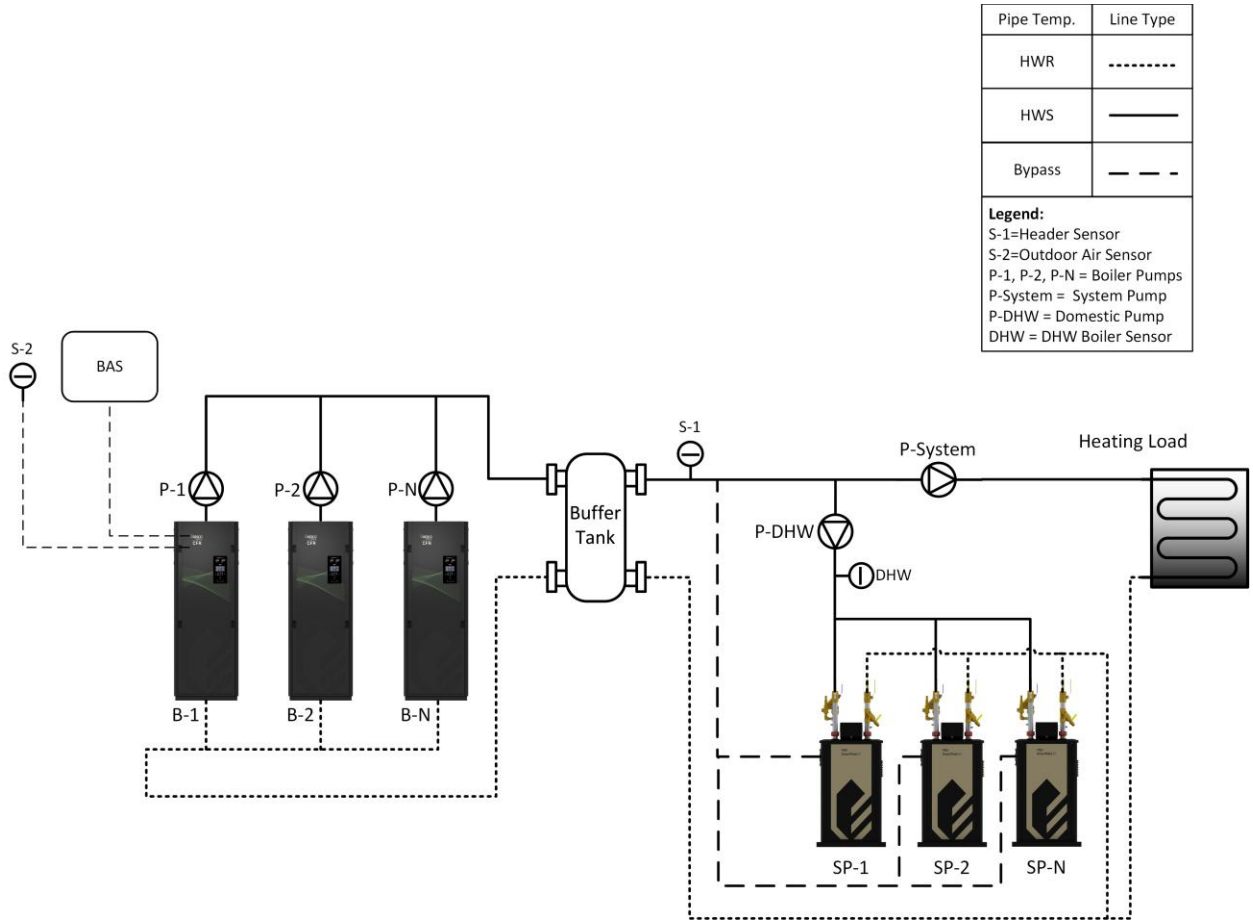

Diagram 4-4a: Combination System with SmartPlate EV and 4-port Buffer Tank Piping

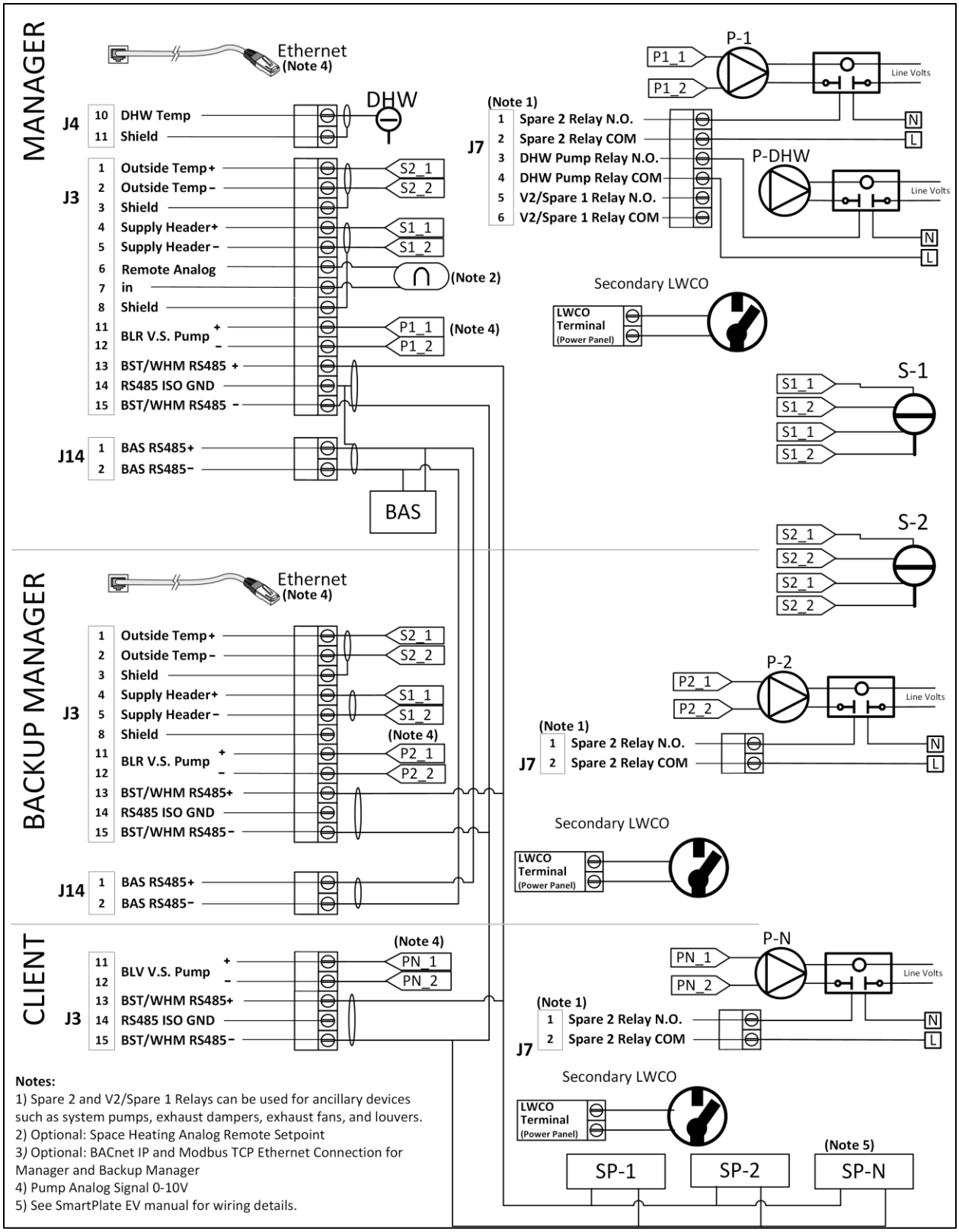

Diagram 4-4b: Combination System with SmartPlate EV and 4-port Buffer Tank Wiring

4.5 Combination System with Indirect Storage Tank Water Heater

CFR boilers are operated via Boiler Sequencing Technology (BST) to provide space heating and domestic hot water generation through an indirect storage tank water heater. Space heating supply temperature is maintained as constant setpoint, via outdoor air reset or from remote setpoint command (from building automation system or via remote analog signal). Domestic hot water generation setpoint is a priority: temperature setpoint is boosted when header temperature falls below DHW setpoint. DHW boiler pump is controlled by an aquastat to provide boiler water to the indirect storage tank water heater. Application utilizes AERCO supplied header sensor, sequencing valves and outdoor air sensor.

- The AERCO Edge® Controller sequences the boiler plant for maximum system efficiency by running as many boilers as available, each operating at its most efficient firing rate.
- Sequencing valves isolate standby boilers from the system, reducing minimum flow requirement.
- Edge controller supports integration with BAS via BACnet IP, Modbus RTU and Modbus TCP.

Essential System Settings:

Edge Controller Parameter	Setting
Application	SH+DHW-Stpt Prty (Space Heating with DHW as priority, i.e., Temperature Boost application)
SH Operating Mode	Constant Setpoint, Outdoor Air Reset or Remote Setpoint
DHW Operating Mode	Constant Setpoint
DHW Pump Control Type	Controlled
DHW Aquastat Enable	Enabled
CASCADE CONFIGURATION-Hdr Temp Sensor	Direct
CASCADE CONFIGURATION-Outdoor Air Temp Sensor *(If SH Operating Mode=Outdoor Air Reset)*	Direct
VALVE CONFIGURATION-Select Output	Cascade Valve
VALVE CONFIGURATION-Valve Feedback	Enabled

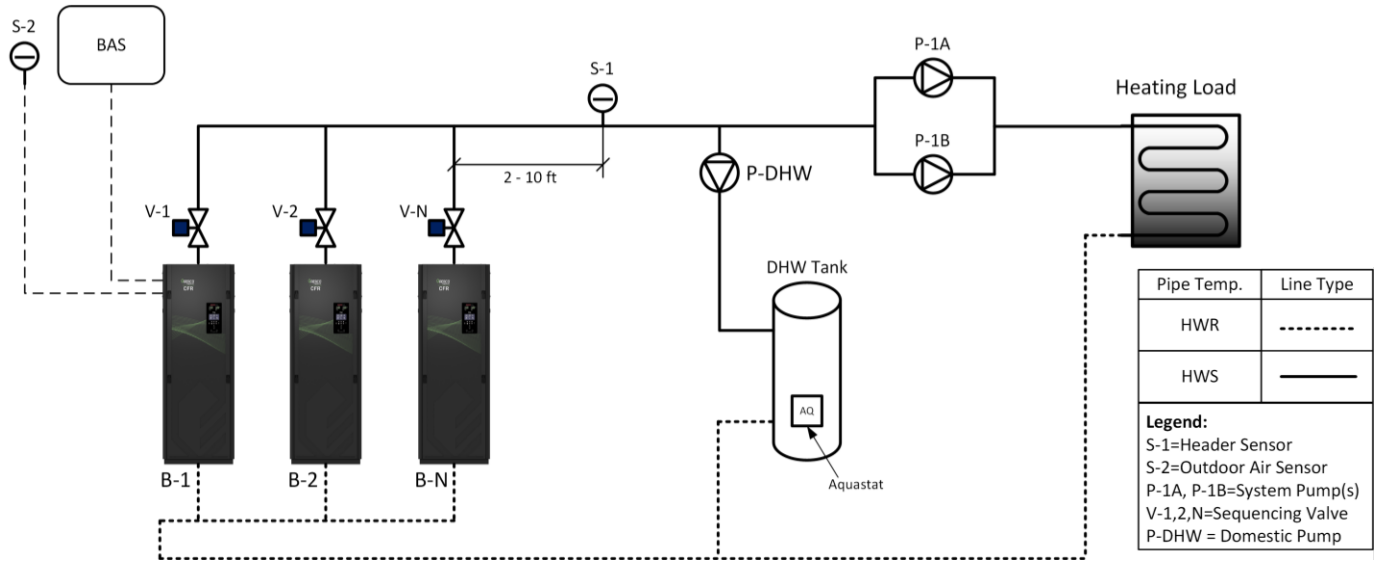

Diagram 4-5a: Combination System with Indirect Storage Tank Water Heater Piping

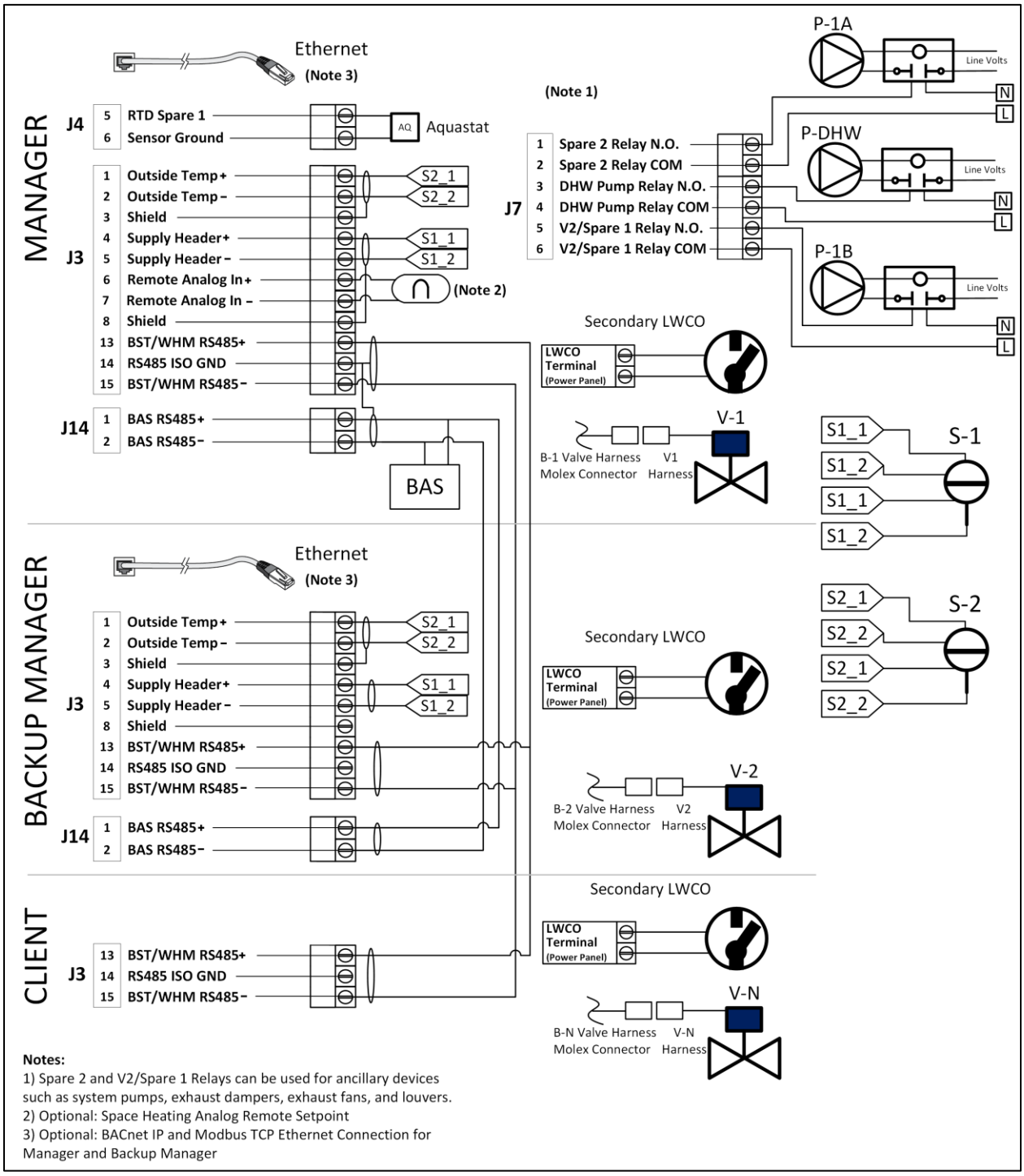

Diagram 4-5b: Combination System with Indirect Storage Tank Water Heater Wiring

4.6 Campus Application

Domestic hot water (DHW) campus application consists of CFR boilers and SmartPlate EV water heaters to provide DHW heating. DHW is generated using AERCO SmartPlate EV water heaters for each building loop. CFR boilers and SmartPlate EV heaters run independently. The boiler loop is at constant temperature from either the CFR(s) or other heat source(s).

The SmartPlate EV monitors the domestic outlet temperature and the flow rate of the incoming domestic water to control the valve located on the inlet. During load conditions, the control valve will adjust to maintain a ±4°F setpoint at up to 50% load changes based on the domestic outlet temperature and flow rate or temperature rate of change and actuate the hydronic side control valve to maintain setpoint. At full demand, the control valve will be completely open providing maximum heat transfer. During no load conditions the SmartPlate control valve will remain closed to prevent heat transfer to the domestic side.

The dedicated SmartPlate pumps (P-2,3,N) are optional and may be constantly on, pressure operated or excluded entirely from the application. **If excluded, balancing valves are required to maintain boiler flow through the SmartPlates.**

The CFR(s) may be used as the primary heat source with other optional heat sources that may be integrated into the system as backup or vice versa. In most cases, some thermal mass must be added as a buffer to dampen fast transitions and minimize boiler cycling. That can occur either during low or no load conditions in which the only load is generated by recirculation piping losses. A bypass is required on the farthest building loop from the heating source(s) to complete the loop when there is no demand.

- The application utilizes AERCO supplied header sensor, and sequencing valves.
- The Edge Controller sequences the boiler plant to obtain maximum system efficiency by running as many boilers as available, each operating at its most lowest firing rate needed to meet demand.
- Sequencing valves isolate standby boilers from the system, reducing minimum flow requirement. The minimum number of valves open is selectable based on system flow.
- Edge[ii] controller supports integration with BAS via BACnet MSTP, BACnet IP, Modbus RTU and Modbus TCP.

Essential System Settings:

Edge Controller Parameter	Setting
Application	SH (Space Heating)
SH Operating Mode	Constant Setpoint, Outdoor Air Reset or Remote Setpoint
CASCADE CONFIGURATION-Hdr Temp Sensor	Direct
CASCADE CONFIGURATION-Outdoor Air Temp Sensor *(If SH Operating Mode=Outdoor Air Reset)*	Direct
VALVE CONFIGURATION-Select Output	Cascade Valve
VALVE CONFIGURATION-Valve Feedback	Enabled

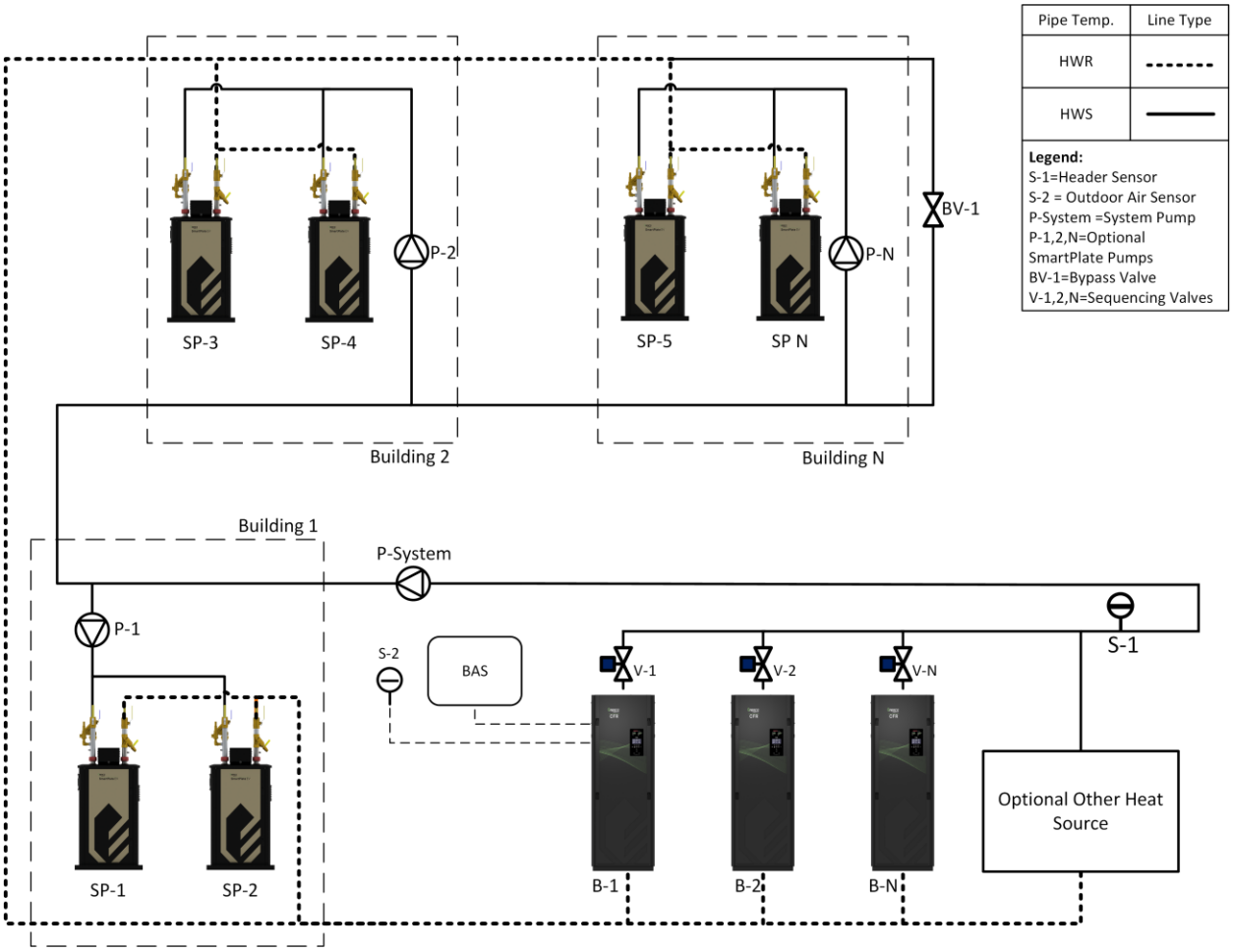

Diagram 4-6a: Campus Application – Piping Diagram

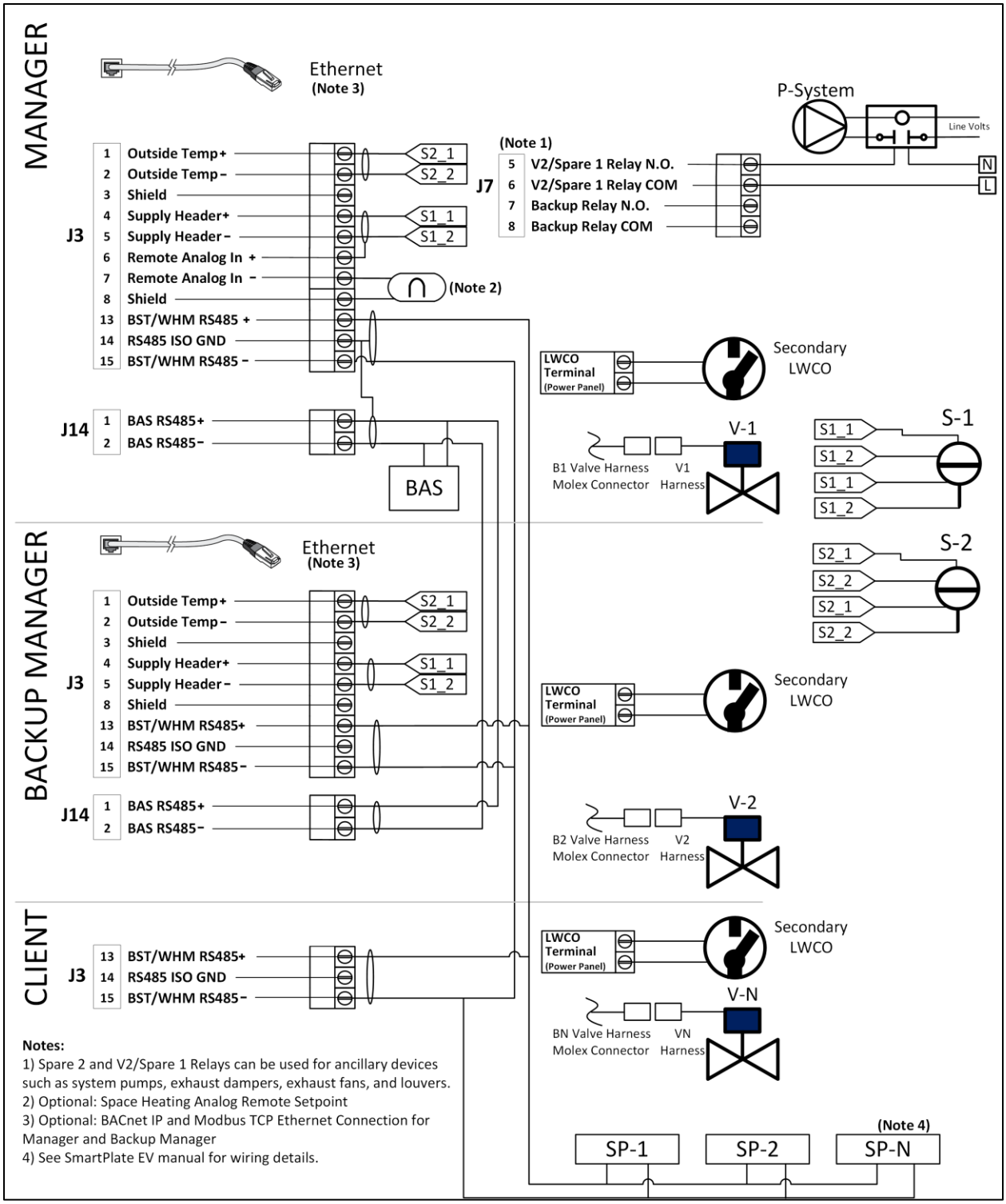

Diagram 4-6b: Campus Application – Wiring Diagram

5. INPUT/OUTPUT REFERENCE DIAGRAM

Wiring connections for temperature sensors, control signals, interlocks and auxiliary equipment are made on the Input/Output board. See CFR Boiler Installation Manual OMM-0163 for details.

The following relays are rated 120VAC, 3A Resistive (1 A Inductive):

- Spare 2 Relay
- DHW Pump Relay
- V2/Spare 1 Relay
- Backup Relay

The following relays are rated 120VAC, 10A Resistive (3A Inductive):

- Fault Relay
- Aux Relay

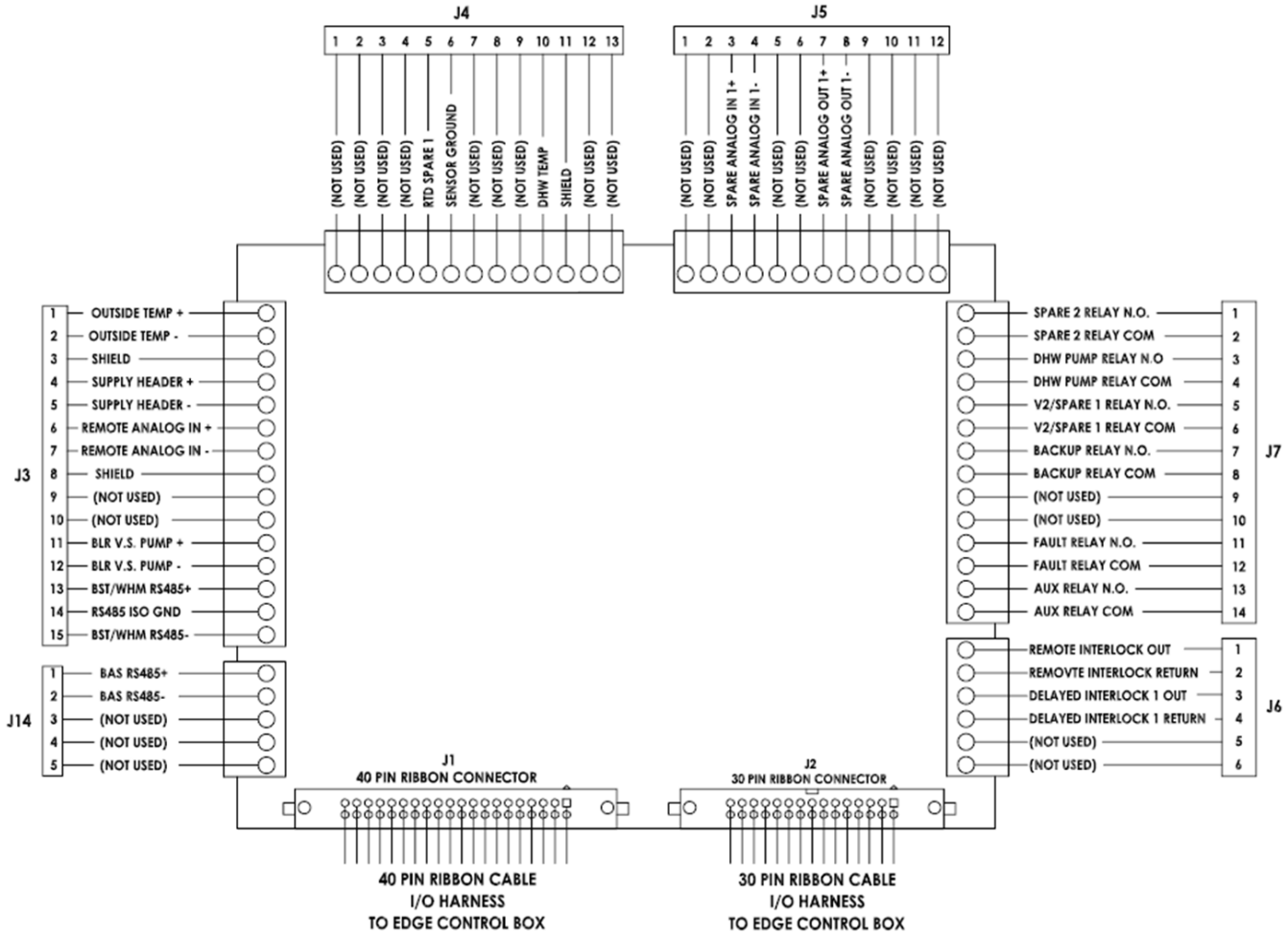

Figure 5-1: CFR Boiler Wiring Guide

© AERCO International, Inc., 2025