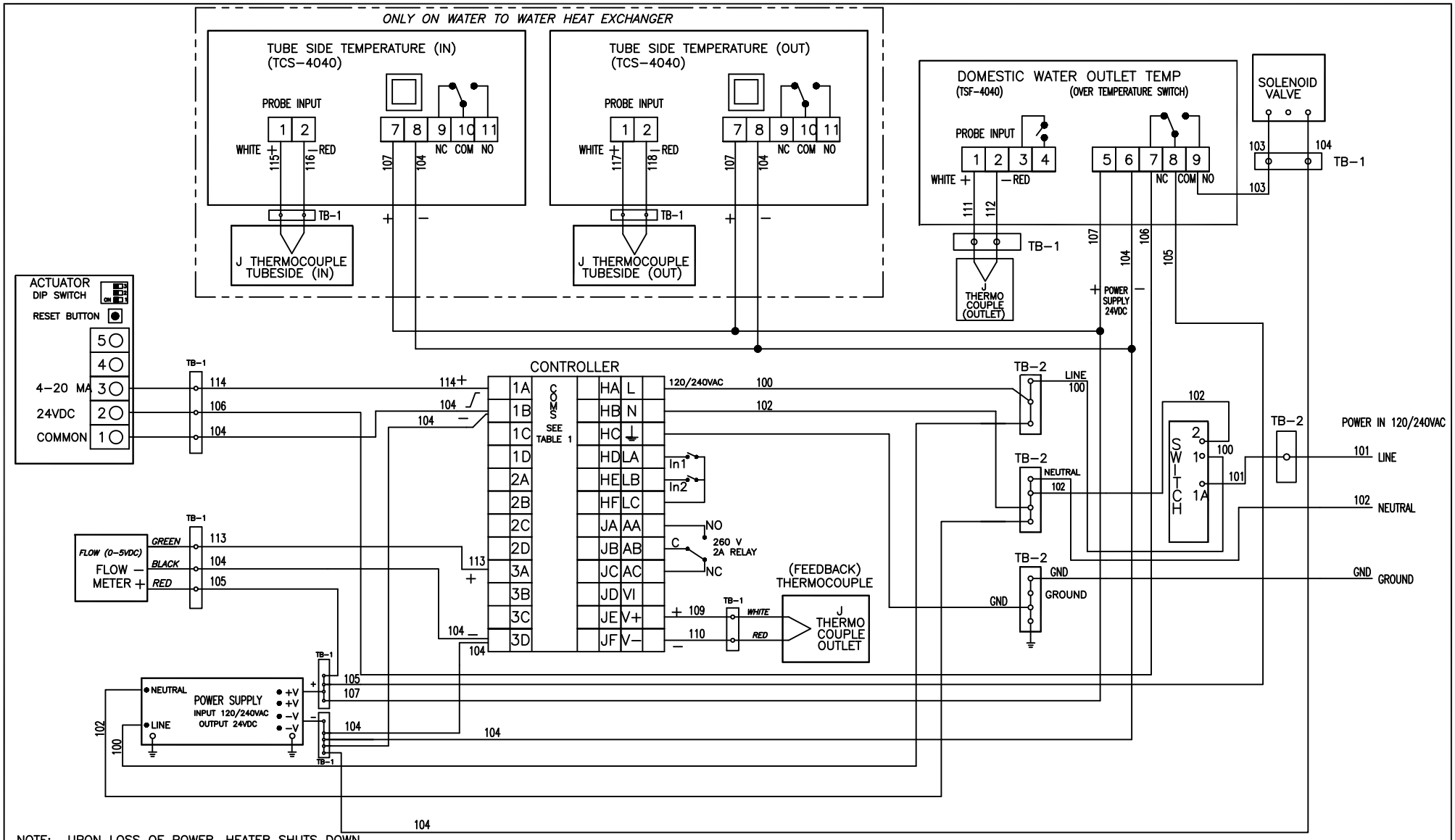

NOTE: UPON LOSS OF POWER, HEATER SHUTS DOWN.

IF ORDERED WITH MODBUS COMMUNICATIONS OPTION, SEE TABLE BELOW FOR SIGNAL CONNECTIONS.
DO NOT ROUTE MODBUS COMMUNICATION WIRING IN THE SAME CONDUIT AS POWER WIRING.
MAXIMUM SIGNAL CABLE LENGTH ALLOWED: RS232 50FT, RS485 4000FT.

TABLE 1

TEMP CONTROLLER		COMPUTER CONTROL CABLE			
			RS-232 / 9 PIN	RS-232 / 25 PIN	RS-485
SIGNAL NAME	PIN NO.	SIGNAL NAME	PIN NO.	PIN NO.	PIN NO.
GROUND	HD	GROUND	5	7	GROUND
RECEIVE	HE	TRANSMIT	3	2	A (-)
TRANSMIT	HF	RECEIVE	2	3	B (+)

AERCO INTERNATIONAL, INC.
NORTHVALE, NJ 07647

INDIRECT FIRED WATER TO WATER HEATER
ELECTRONIC CONTROL SYSTEM (ECS)
WIRING DIAGRAM

DWN.BY CZ DATE 020206
SCALE
APPD. DATE

SD-A-667

REV. B